ELECTRICAL SPECIFICATIONS:

Type	SDR1332-03J01-F06-G
Impedance at 1kHz	32Ω±10%
Rated Input Power	10mW
Maximum Input Power	30mW
Resonance Frequency	300～3400Hz
Sensitivity at 100mVrms at 1kHz	110±2dB
THD at 179mVrms (300-4000Hz)	＜5% (1kHz)
Operating Temperature Range	-40℃～+70℃
Storage Temperature Range	-40℃～+85℃
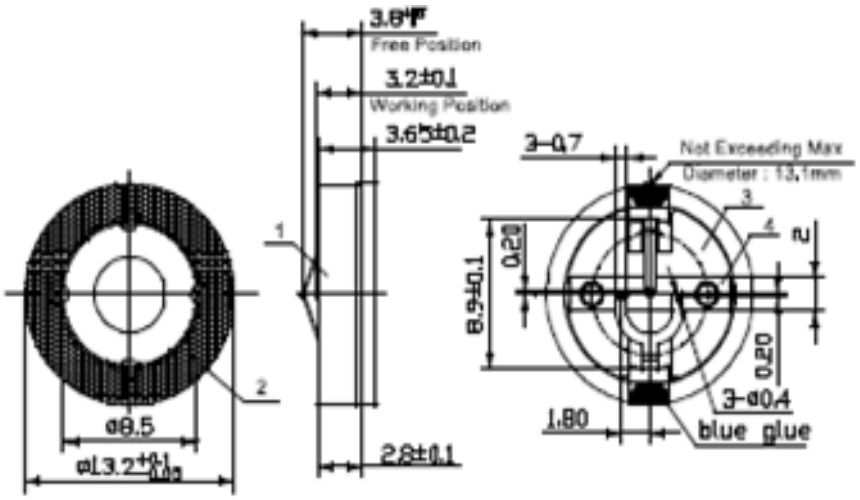
DIMENSIONS UNIT:mm Tolerance:±0.2mm