ELECTRICAL SPECIFICATIONS:

Type	SDR1332Q-W1-FB-G
Impedance at 1kHz	32Ω±10%
Rated Input Power	10mW
Maximum Input Power	30mW
Resonance Frequency	300(+50/-100)Hz
Sensitivity at 179mVrms at 1kHz	104±3dB
THD at 179mVrms (300-4000Hz)	＜10% (300～500Hz)
	＜5% (500～40000Hz)
	＜1% (1kHz)
Operating Temperature Range	-20℃～+70℃
Storage Temperature Range	-40℃～+85℃
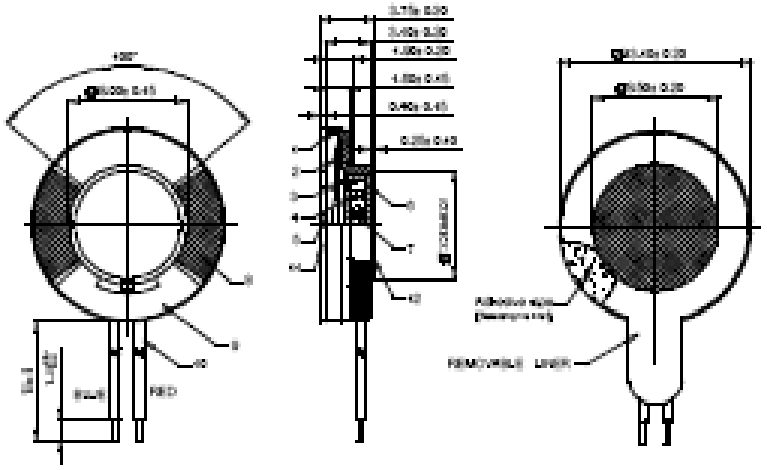
DIMENSIONS UNIT:mm Tolerance:±0.2mm